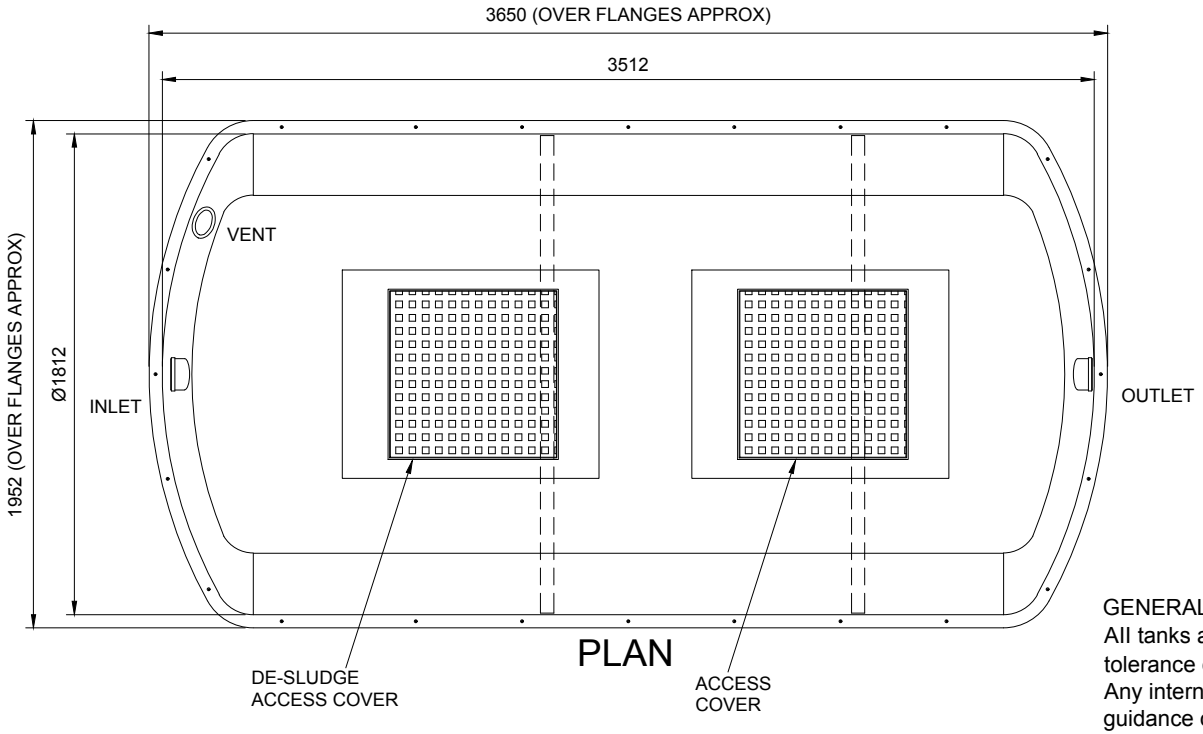

PLAN

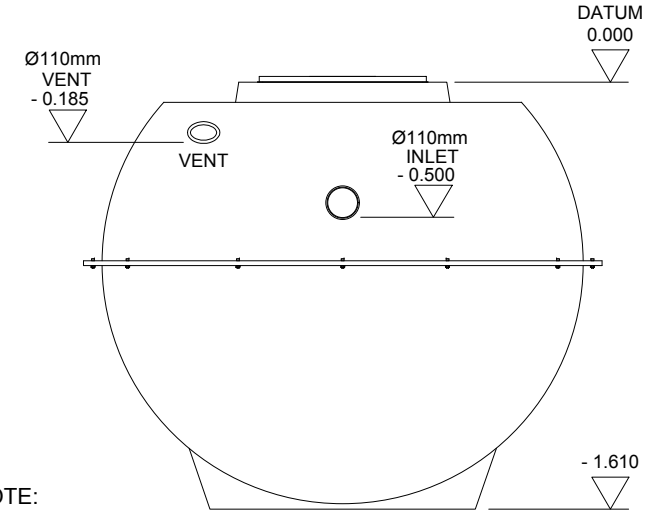

VIEW ON INLET

GENERAL NOTE:
All tanks are subject to a 2.5% tolerance on all dimensions. Any internals (if shown) are for guidance only, and may vary in design / individual specifications.

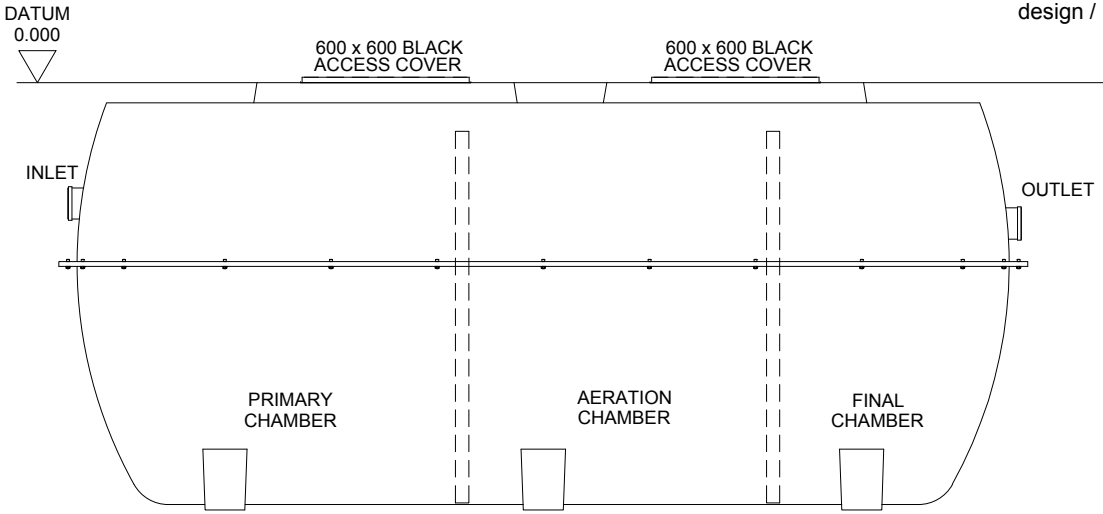

SIDE ELEVATION

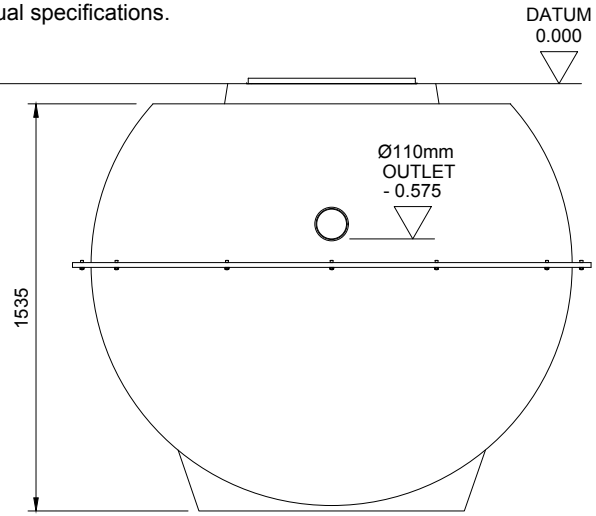

VIEW ON OUTLET

REV	DESCRIPTION	DATE	SIG	REV	DESCRIPTION	DATE	SIG	REV	DESCRIPTION	DATE	SIG
								A	For Approval	20.07.14	P.L.

THIS DRAWING IS THE PROPERTY OF MARSH INDUSTRIES LTD. AND MUST NOT BE REPRODUCED OR CIRCULATED FOR ANY PURPOSE WHATSOEVER WITHOUT FIRST OBTAINING WRITTEN CONSENT FROM THE MARSH INDUSTRIES LTD.

ORIG.	CHKD	APP'D
	SCALE N.T.S.	DATE 20.07.2014

3 RD ANGLE PROJECTION — DO NOT SCALE IF IN DOUBT ASK

CLIENT

TITLE
MARSH UNI:ENSIGN
SHALLOW TANK RANGE
16 (SIXTEEN PERSONS)
EN12566-3:2005+A1:2009
GRAVITY OUTLET.

MARSH
MARSH INDUSTRIES LTD.
UNITS 9-13 ADDINGTON PARK IND. EST., LITTLE ADDINGTON, KETTERING, NORTHAMPTONSHIRE, NN14 4AS.

DRG. ES 16PE STD — REV A