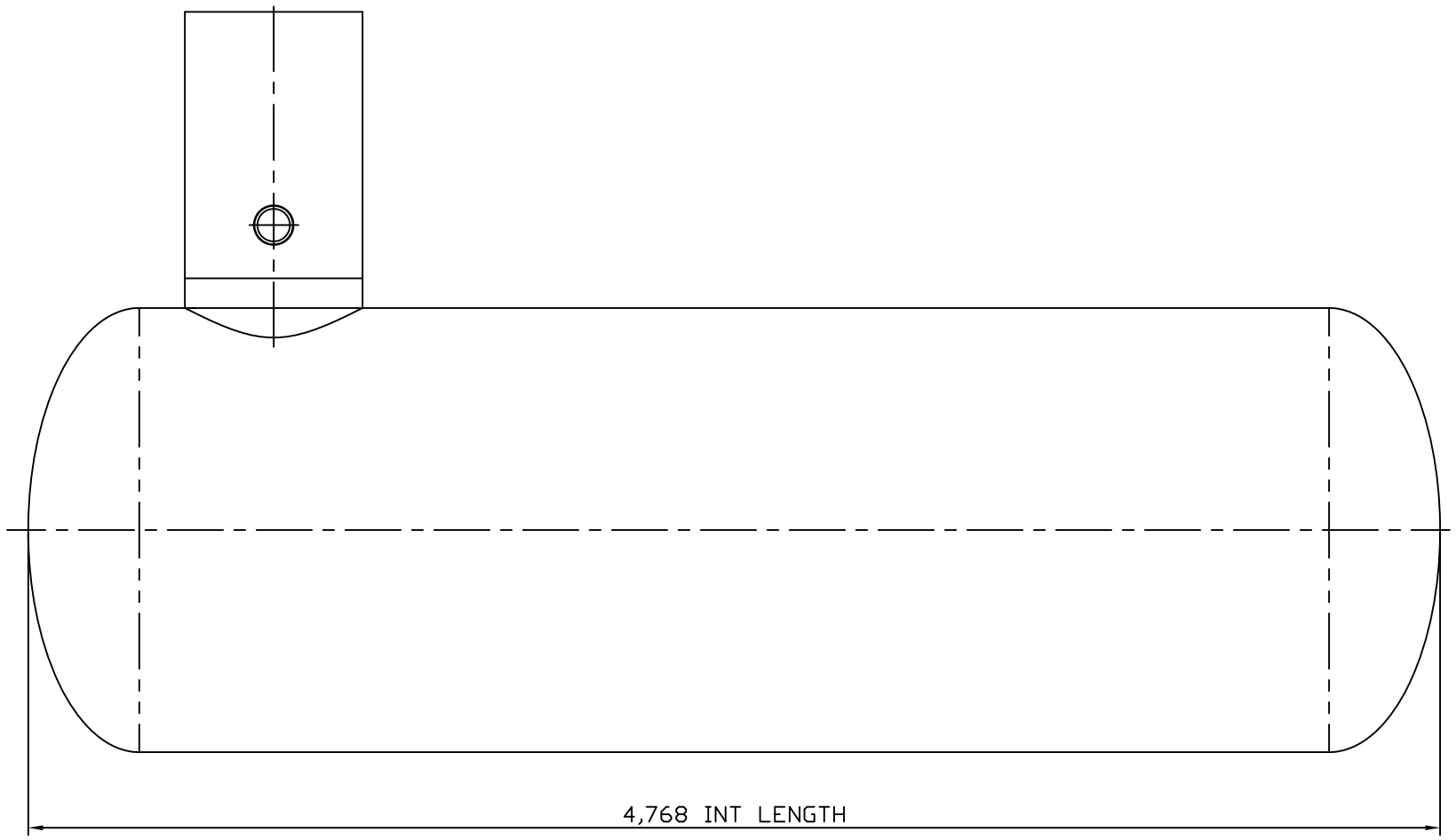

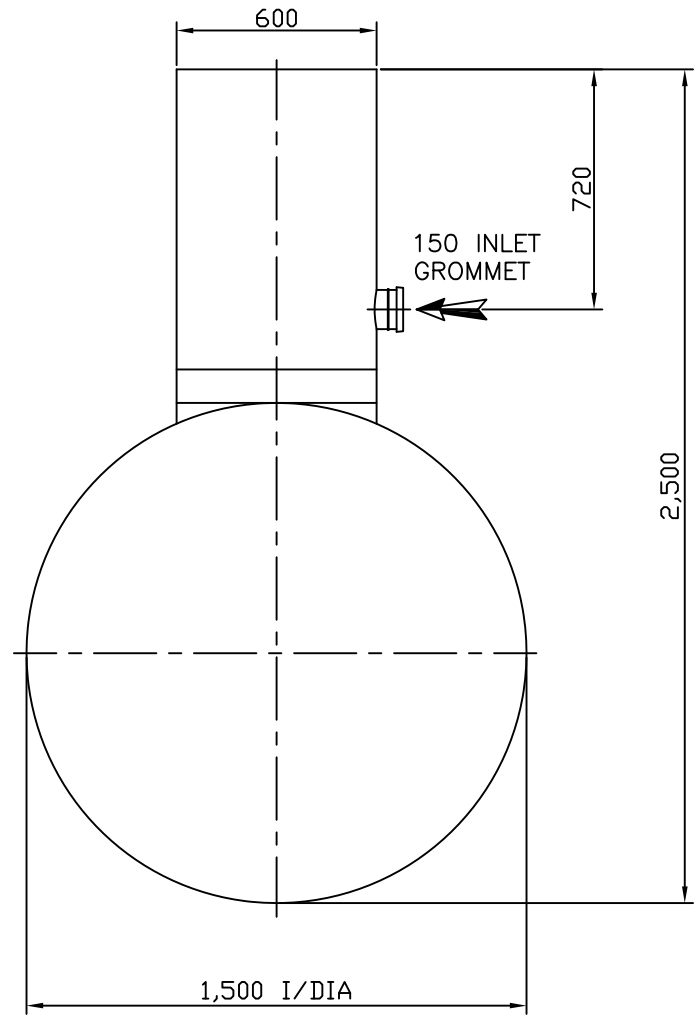

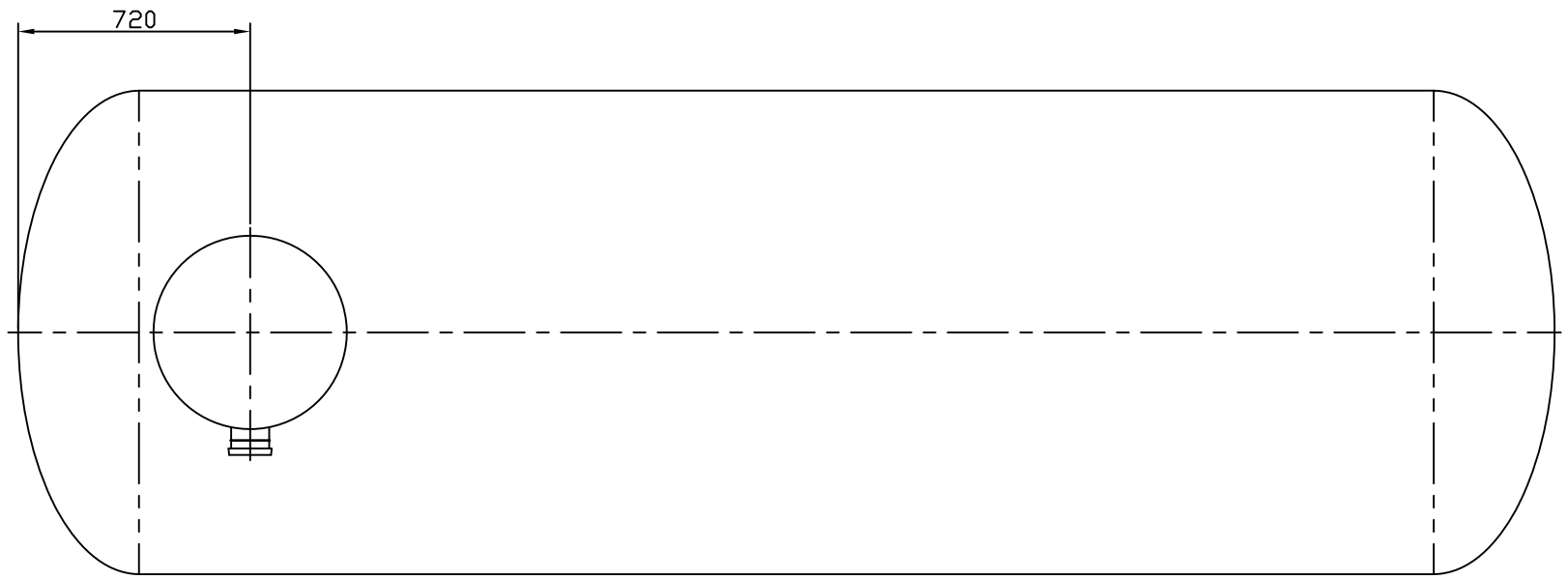

IMPORTANT INVERT LEVEL NOTE (RIBBED TANKS ONLY!):
The inlet and outlet Invert Level(IL) shown on this drawing is to internals of the shell unless otherwise stated.
For Invert level to the outside of the shell ribs, see the conversion below:
Ø1.0m, 1.2m, 1.5m, 1.8m, 2.5m IL+50mm ('X')
Ø3.0m,4.0m IL+75mm ('X')

TANKS SUPPLIED WITH LOOSE SHAFTS DO NOT COME SUPPLIED WITH A FIXING KIT.
THIS IS THE RESPONSIBILITY OF THE SITE CONTRACTOR.

PREMIER TECH AQUA

1ST ANGLE PROJECTION

TITLE

CP8.0 – 8,000L CESSPOOL

REV.	DATE	BY	CHKD.	APPD.	DESCRIPTION
1	23.03.09	RU	PB	RP	ISSUED FOR INFORMATION

A3

DO NOT SCALE
IF IN DOUBT ASK
ALL DIMENSIONS IN MM

GENERAL TOLERANCES (unless noted otherwise)

	LINEAR	ANGLE
GRP	± 5mm	±0.5°
FABRICATED	± 2mm	±0.2°
MACHINED	± 0.5mm	±0.1°

THIS DRAWING IS THE PROPERTY OF PREMIER TECH AQUA Ltd. AND IS NOT TO BE COPIED IN PART OR WHOLE WITHOUT WRITTEN PERMISSION

DRAWN BY	CHKD.	APPD.	SCALE	DRAWING No.	REVISION
RU	PB	RP	NTS	CP8.0 SALES	1
DATE 23.03.09	DATE 23.03.09	DATE 23.03.09			